mm [inch]

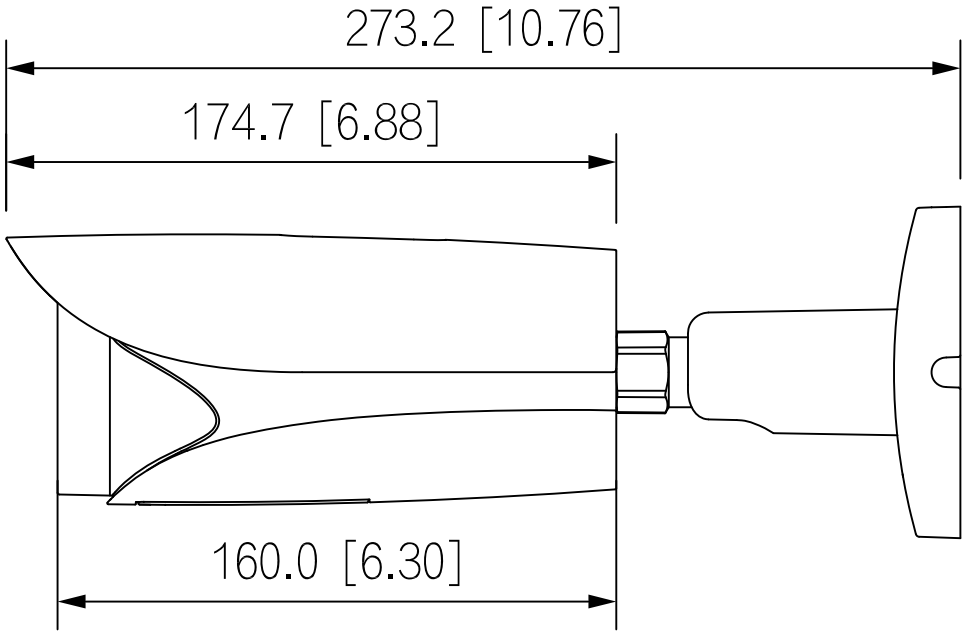

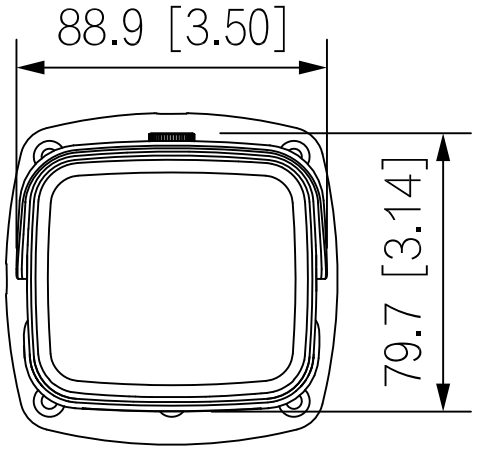

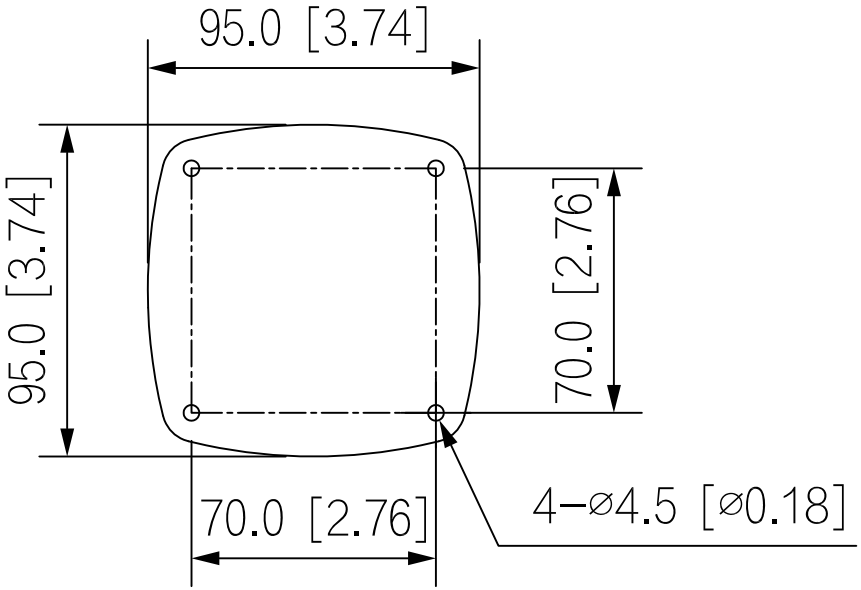

www.setik.biz

setik
Feel safe. Live better.
#scelgosetik