mm [inch]

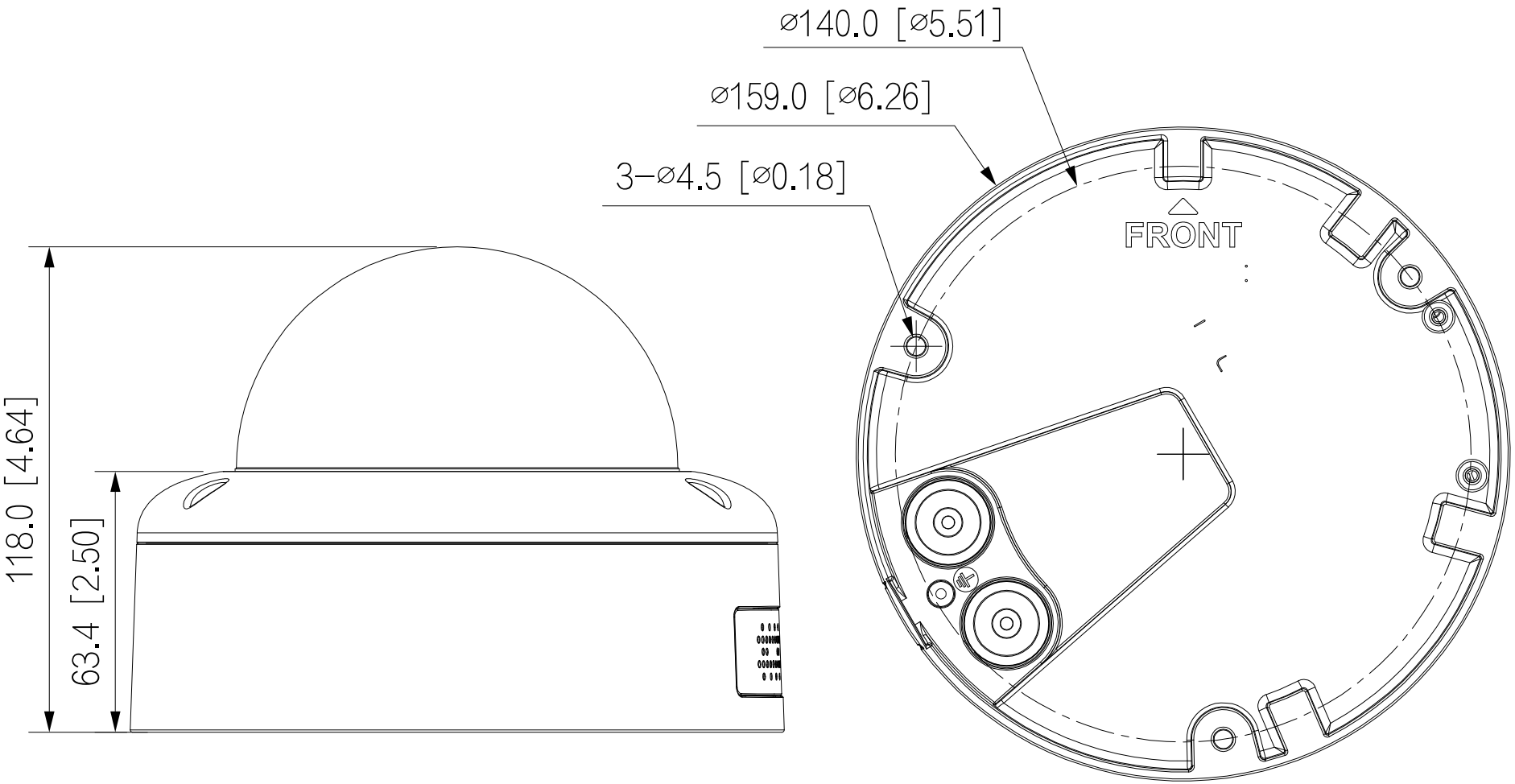

setik
Feel safe. Live better.
#scelgosetik