mm [inch]

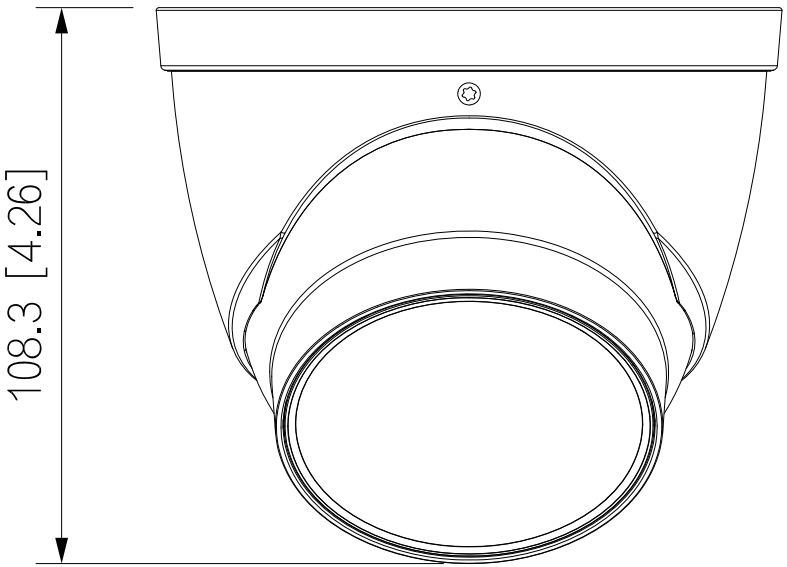

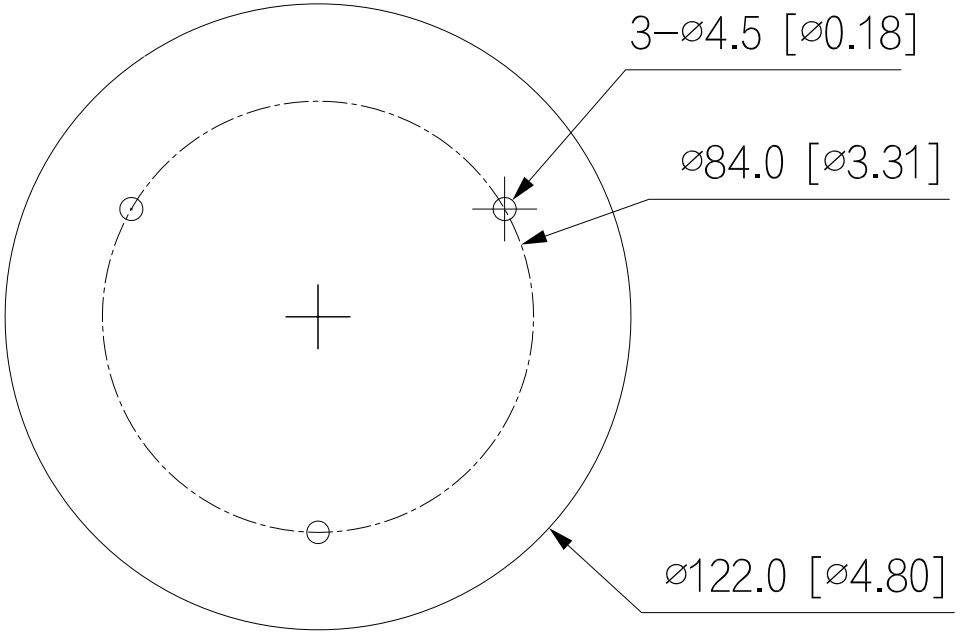

setik
Feel safe. Live better.
#scelgosetik